SURFACE MOUNT CRYSTAL FCX-03

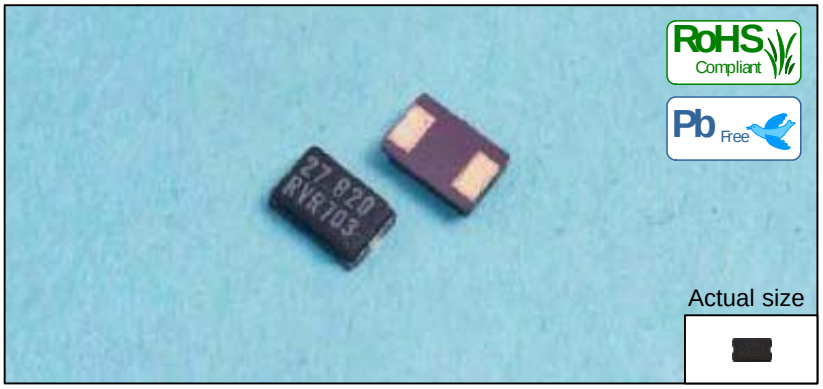

Features

- Compact design (5.0mm×3.2mm×1.5mm Max., Weight : 0.06g).
- Resin sealed ceramic package assures extreme accuracy and high reliability.
- Lead-free soldering is available.
- Applications : Laptop PC, DSC, DVC

Dimensions

Unit : mm

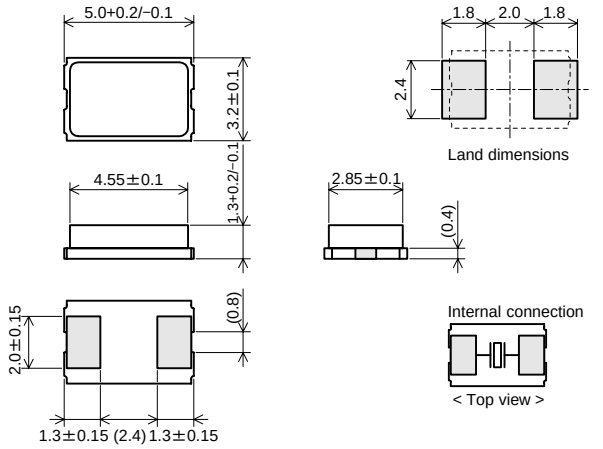

Specifications

Item	Standard specifications			
Frequency range(MHz)	8.0 to 60.0			
Overtone order	Fundamental			
Frequency tolerance (ppm)(at 25°C)	±15, ±30, ±50, ±100			
Storage temperature range(°C)	−40 to +85			
Operating temperature range(°C)	0 to +50	−10 to +60	−20 to +70	−40 to +85
Frequency versus temperature characteristics(ppm) (Refer to 25°C)	±10 ±30 ±50 ±100	±15 ±30 ±50 ±100	±20 ±30 ±50 ±100	±30 ±50 ±100
Motional resistance (ESR)	As per below table			
Level of drive(μW)	500 Max.			
Load capacitance(pF)	8.0, 10.0			

Frequency(MHz)	Motional resistance(ESR)(Ω)
8.0 to 9.0	500 Max.
9.0 to 9.5	250 Max.
9.5 to 10.0	200 Max.
10.0 to 12.0	150 Max.
12.0 to 16.0	100 Max.
16.0 to 30.0	70 Max.
30.0 to 60.0	50 Max.

- Please consult us for customized specifications.
- All specifications and markings subjected to change without notice.

Taping

Unit : mm

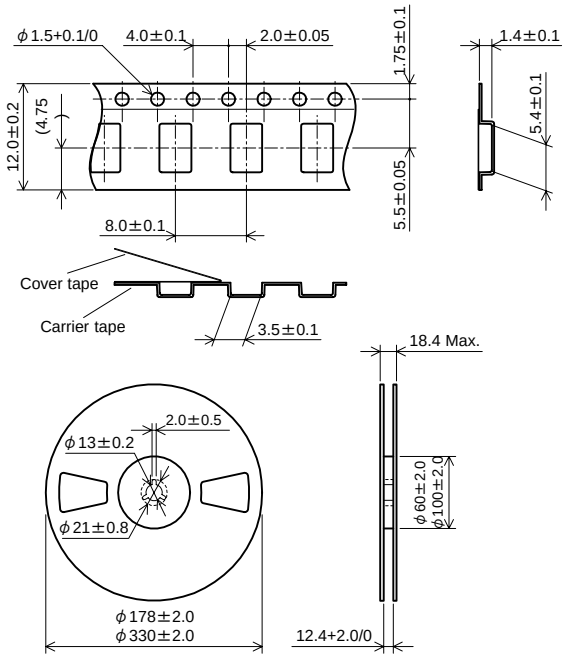

Quantity(ϕ178) : 1000 pieces Max./Reel
Quantity(ϕ330) : 3000 pieces Max./Reel

RIVER ELETEC CORPORATION
URL http://www.river-ele.co.jp

Head Office : 2-1-1 Fujimigaoka Nirasaki Yamanashi Japan Phone 81-551-22-1211 Fax 81-551-22-6645
Tokyo Office : 4-40-14 Nishishinjuku Shinjuku-ku Tokyo Japan Phone 81-3-3377-5444 Fax 81-3-3374-2865
Utsunomiya Office : Phone 81-28-625-7181 Fax 81-28-625-7159
Osaka Office : Phone 81-6-6998-4888 Fax 81-6-6998-4899
Nagoya Office : Phone 81-52-776-9531 Fax 81-52-776-9532
River Electronics(Singapore)Pte.Ltd : Phone 65-6258-7874 Fax 65-6258-7366
(Shanghai Liaison Office) : Phone 86-21-64032210 Fax 86-21-64037412
Taiwan River Co.,Ltd. : Phone 886-2-8988-2811 Fax 886-2-2983-4785
Xi'an River Electronics Corporation : Phone 86-29-88697274 Fax 86-29-88635134